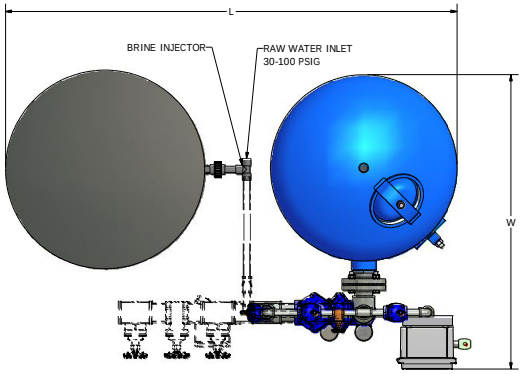

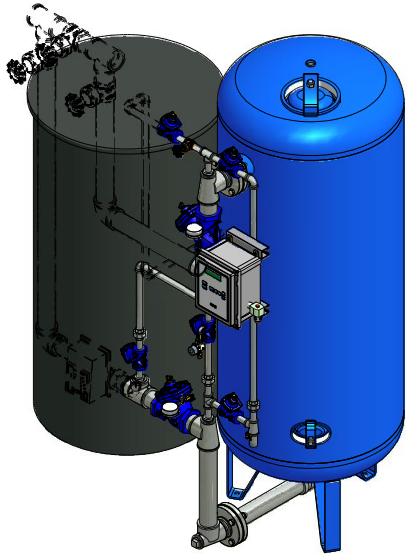

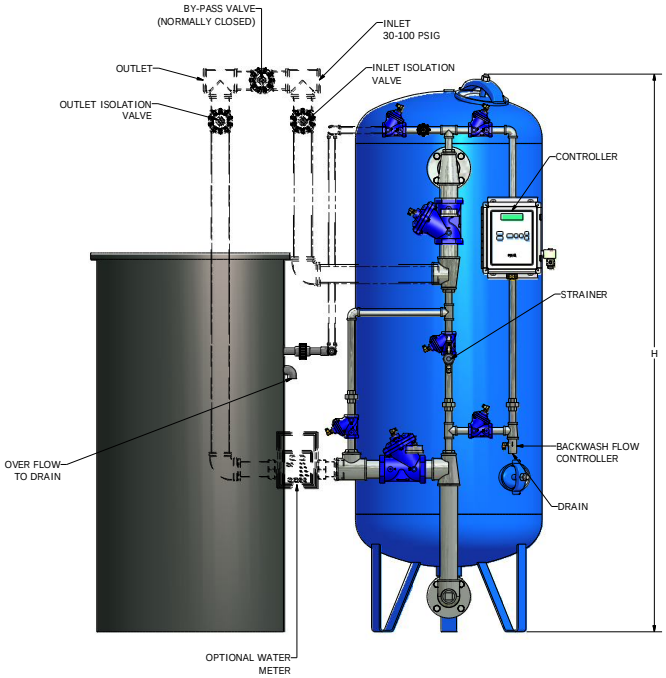

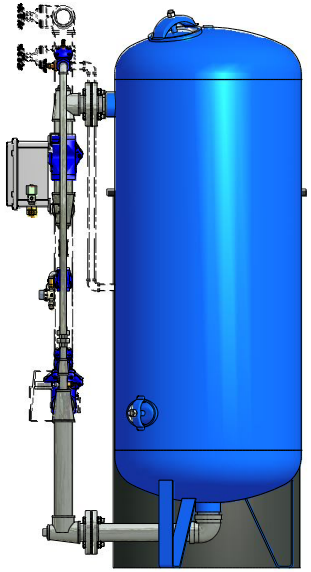

NOTES:

ALL PIPING, FITTINGS, ETC SHOWN WITH DASHED LINES ARE PROVIDED BY OTHERS.

GENERAL PLUMBING CONNECTIONS ARE SHOWN FOR CLARITY ONLY.

MINERAL TANKS SMALLER THAN 36" DIAMETER HAVE HANDHOLES.

DIMENSION TABLE	MR-_____
L=_____	MT=_____
W=_____	BT=_____
H=_____	

PIPE SIZES	
INLET=_____	DRAIN=_____
OUTLET=_____	INJECTOR=_____

REVISIONS			
NO.	DATE	BY	REMARKS

MARLO INCORPORATED

MR SINGLE WATER SOFTENER SYSTEM
GENERAL ARRANGEMENT

FRAC.	DEC.	FILE ID.	
DRN. Anthony		SCALE	SHEET 1 OF 1
APPD.		DRAWING NO. MR SINGLE MX-II	REV.
DATE 4/24/2009			